Spread Spectrum

Introduction to Spread Spectrum

- Problems such as capacity limits, propagation effects, synchronization occur with wireless systems
- Spread spectrum modulation spreads out the modulated signal bandwidth so it is much greater than the message bandwidth
- Independent code spreads signal at transmitter and despreads signal at receiver

Multiplexing

- Multiplexing in 4 dimensions
  - space (s_i)
  - time (t)
  - frequency (f)
  - code (c)

- Goal: multiple use of a shared medium

- Important: guard spaces needed!

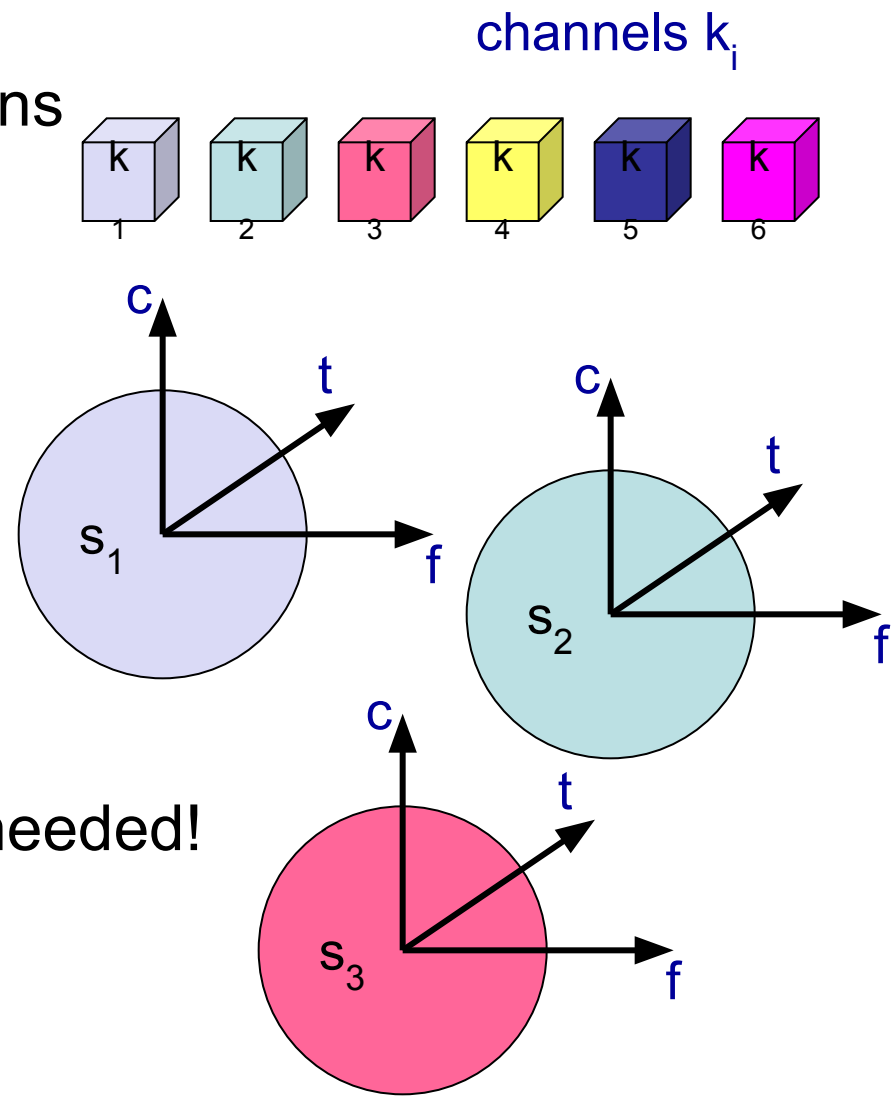

Frequency multiplex

- Separation of spectrum into smaller frequency bands
- Channel gets band of the spectrum for the whole time
- Advantages:
  - no dynamic coordination needed
  - works also for analog signals
- Disadvantages:
  - waste of bandwidth
    if traffic distributed unevenly
  - inflexible
  - guard spaces

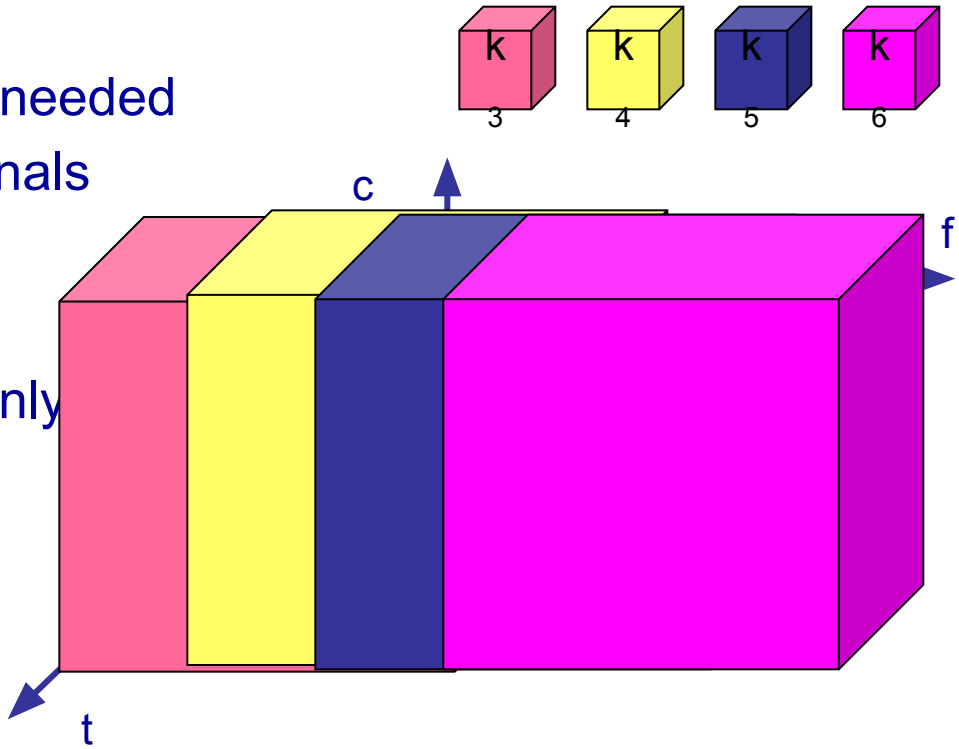

Time multiplex

- Channel gets the whole spectrum for a certain amount of time
- Advantages:
  - only one carrier in the medium at any time
  - throughput high even for many users
- Disadvantages:
  - precise synchronization necessary

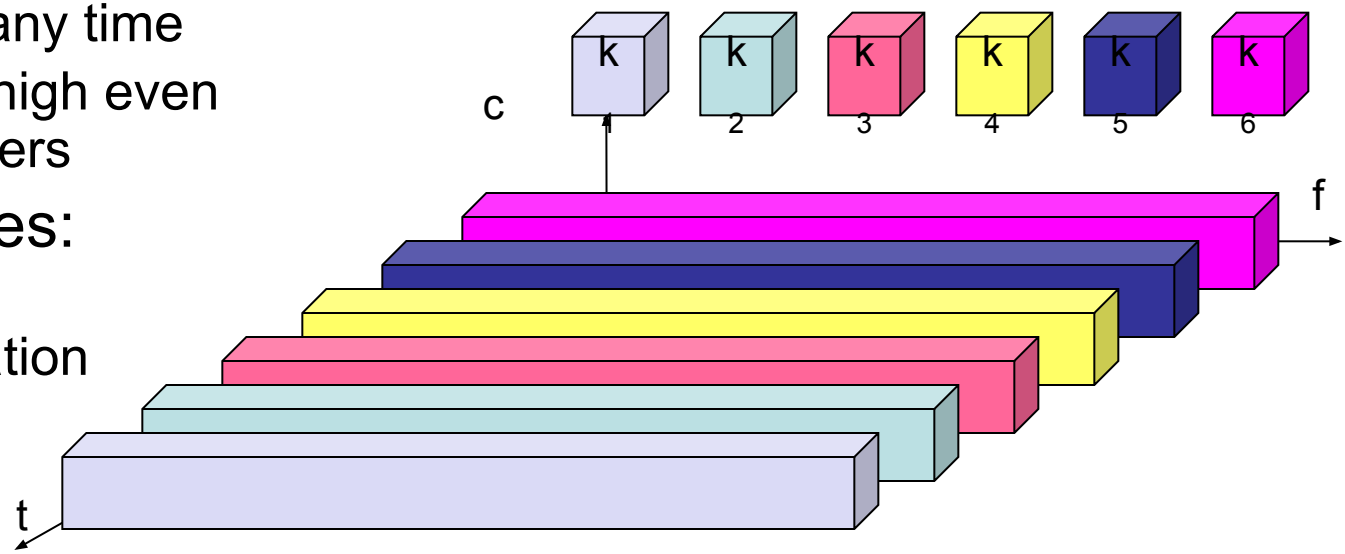

Time and frequency multiplex

- A channel gets a certain frequency band for a certain amount of time (e.g. GSM)
- Advantages:
  - better protection against tapping
  - protection against frequency selective interference
  - higher data rates compared to code multiplex
- Precise coordination required

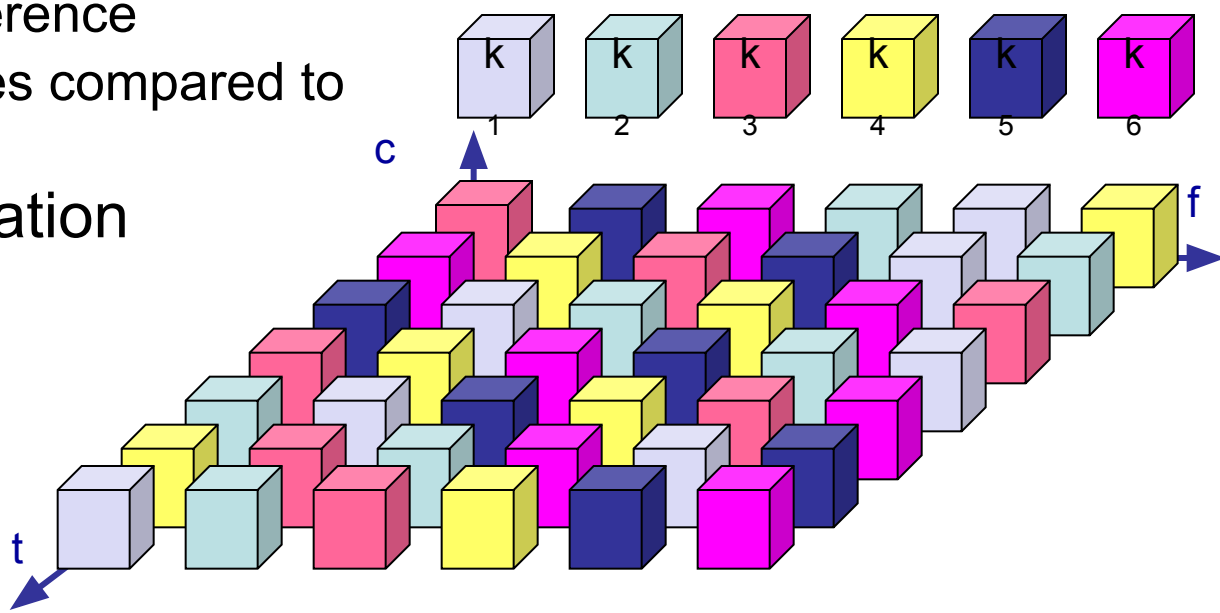

Code multiplex

- Each channel has unique code
- All channels use same spectrum at same time
- Advantages:
  - bandwidth efficient
  - no coordination and synchronization
  - good protection against interference
- Disadvantages:
  - lower user data rates
  - more complex signal regeneration
- Implemented using spread spectrum technology

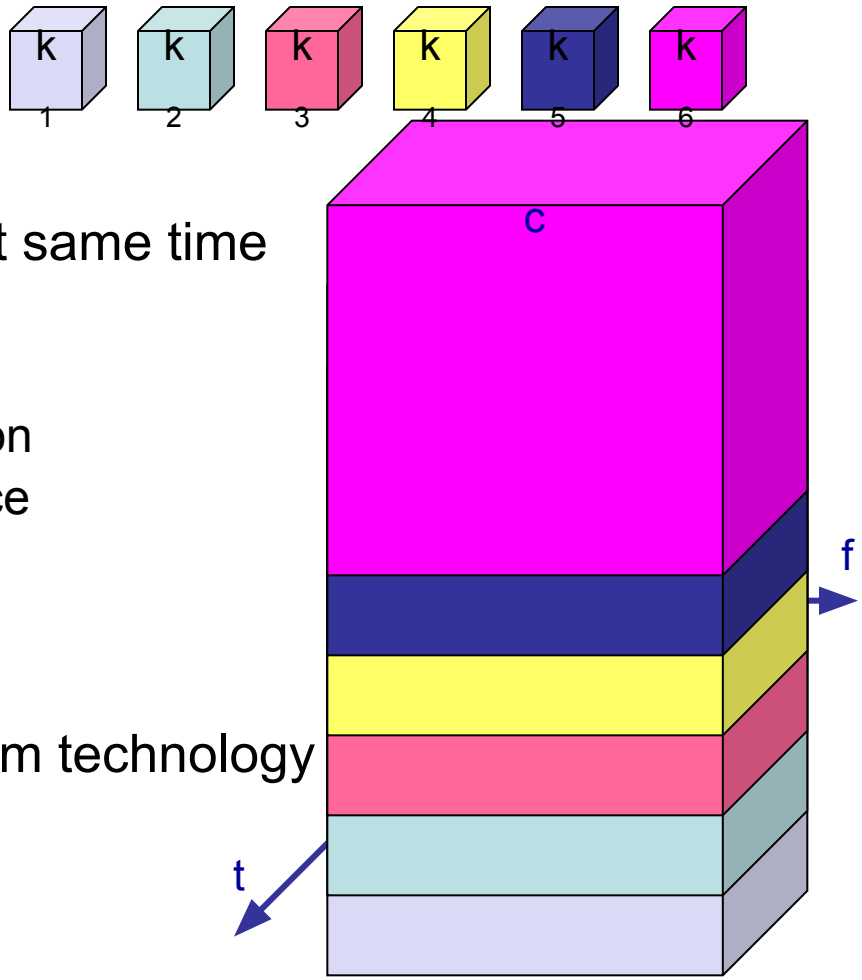

Spread Spectrum Technology

- Problem of radio transmission: frequency dependent fading can wipe out narrow band signals for duration of the interference
- Solution: spread the narrow band signal into a broad band signal using a special code

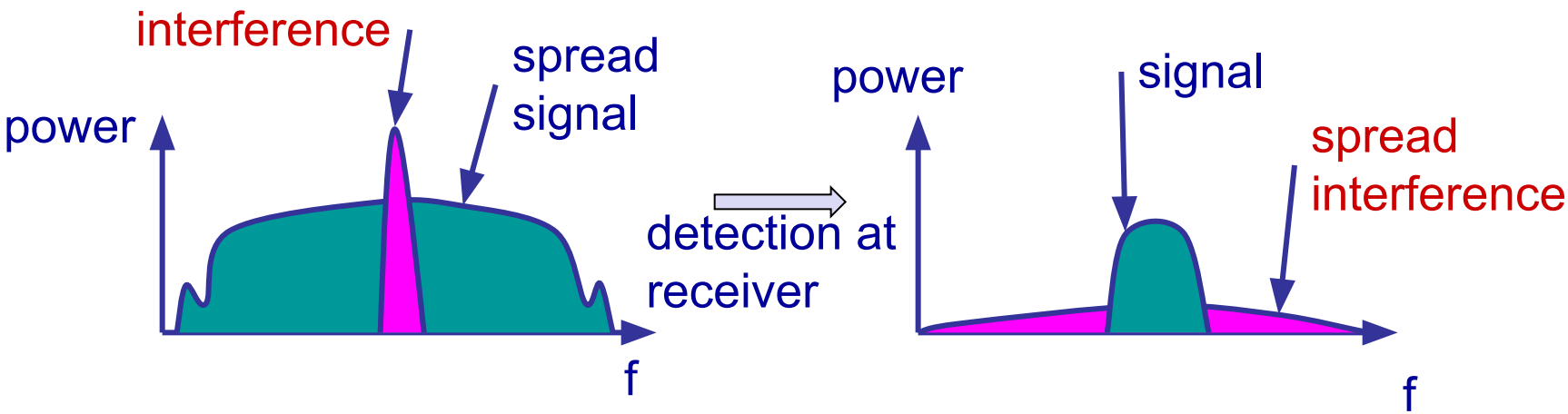

Spread Spectrum Technology

- Side effects:
  - coexistence of several signals without dynamic coordination
  - tap-proof
- Alternatives: Direct Sequence (DS/SS), Frequency Hopping (FH/SS)
- Spread spectrum increases BW of message signal by a factor *N*, Processing Gain

$$\text{Processing Gain } N = \frac{B_{ss}}{B} = 10\log_{10}\left(\frac{B_{ss}}{B}\right)$$

Effects of spreading and interference

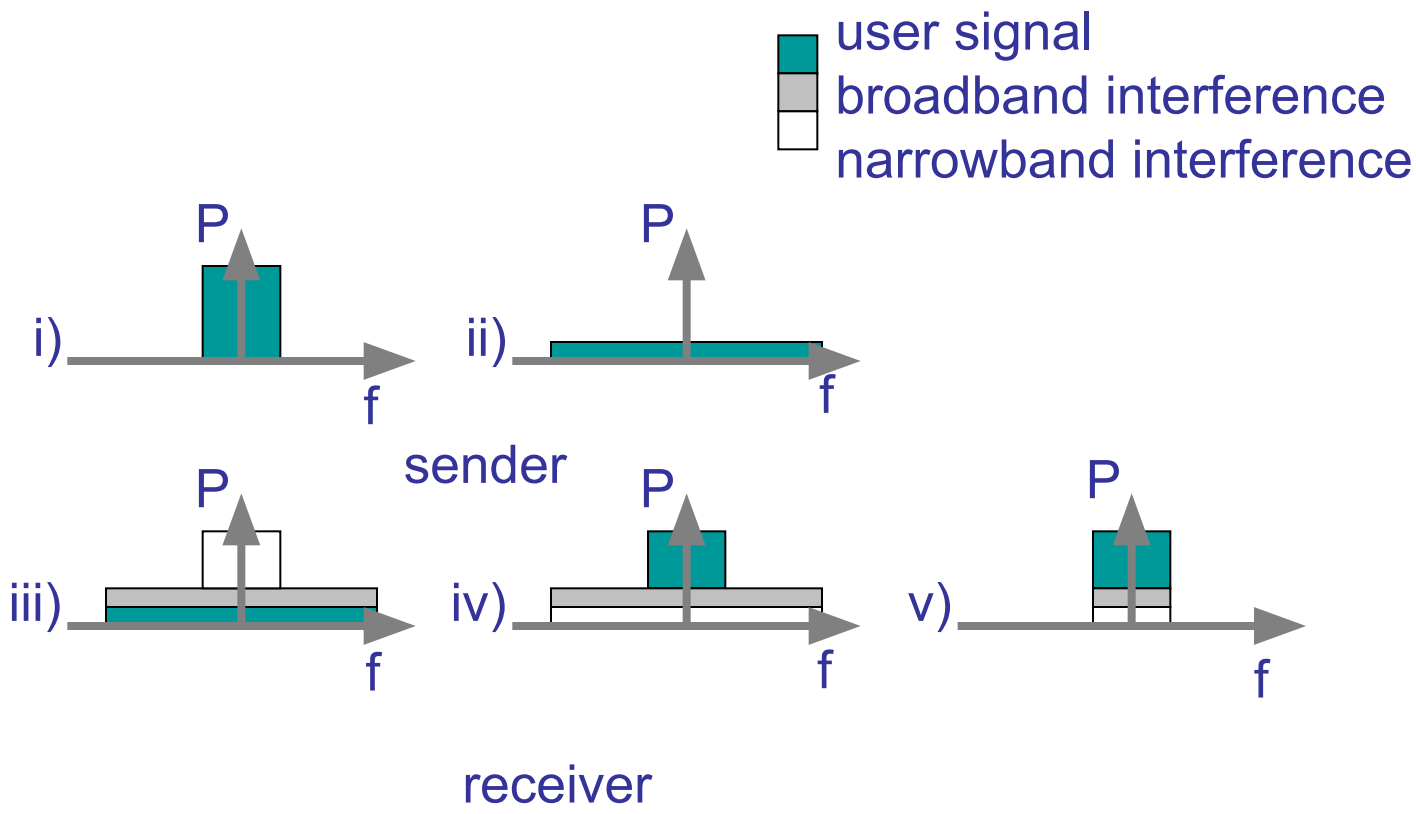

Spreading and frequency selective fading

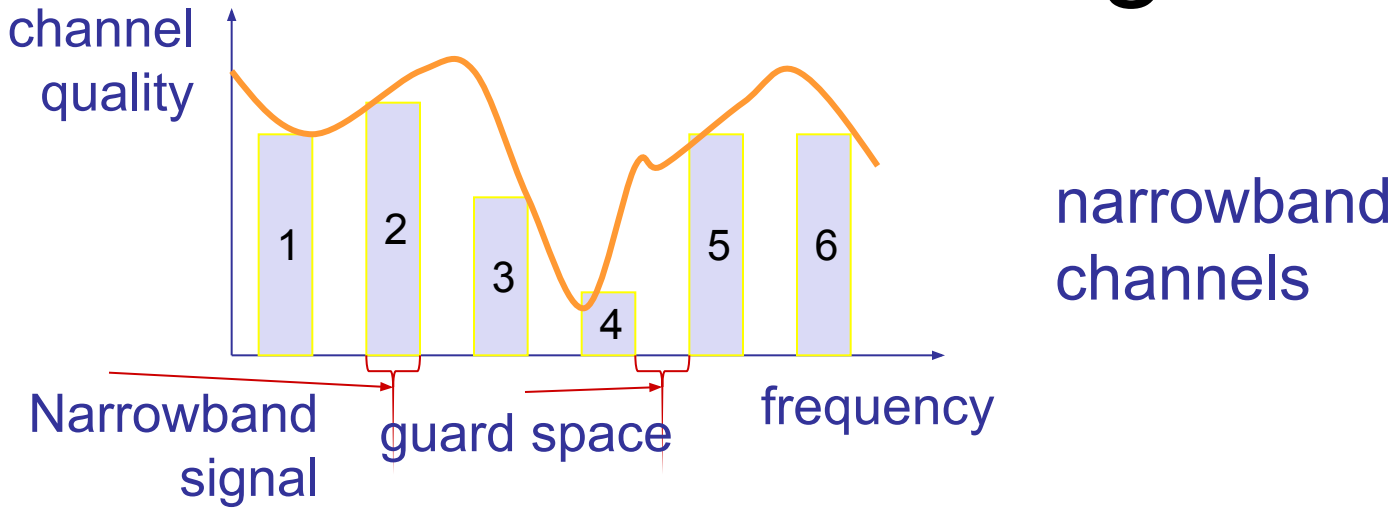

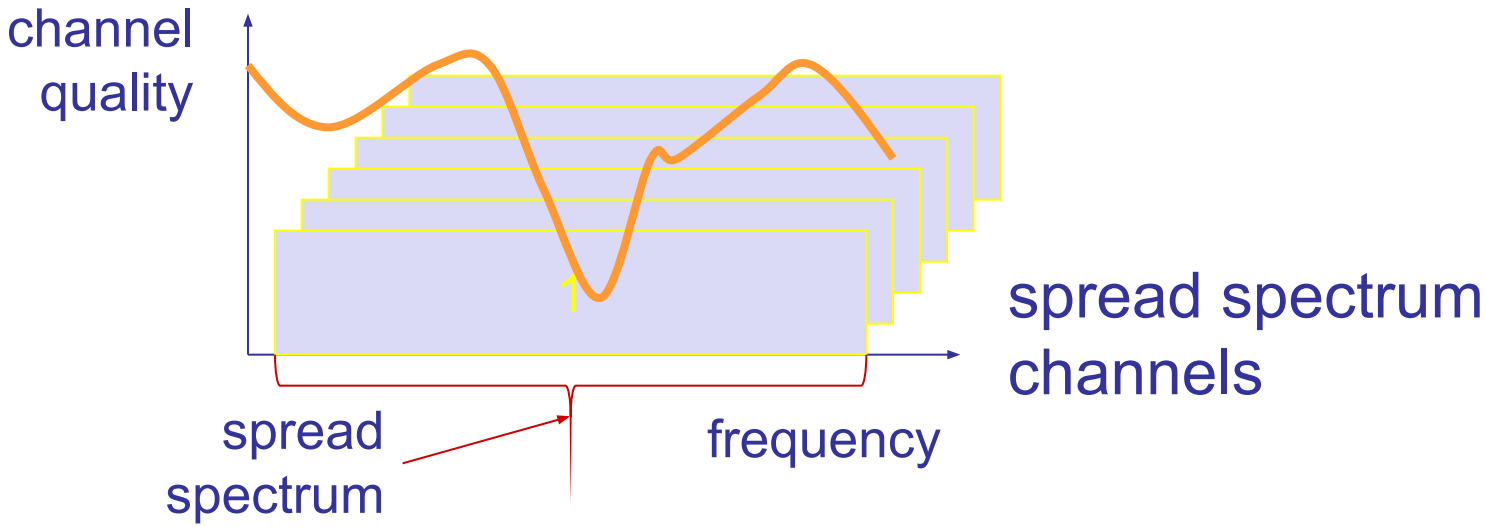

DSSS (Direct Sequence Spread Spectrum) I

- XOR the signal with pseudonoise (PN) sequence (chipping sequence)
- Advantages
  - reduces frequency selective fading
  - in cellular networks
    - base stations can use the same frequency range
    - several base stations can detect and recover the signal
- But, needs precise power control

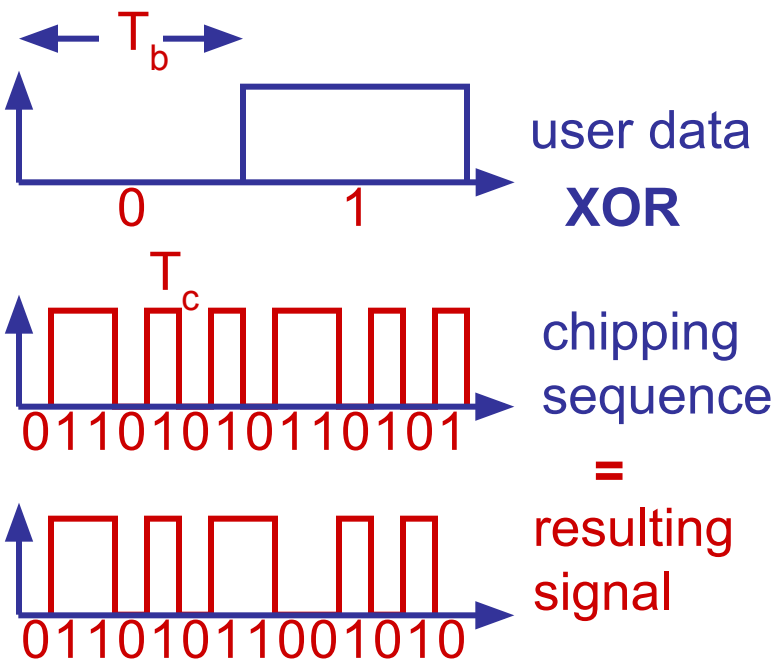

DSSS (Direct Sequence Spread Spectrum) II

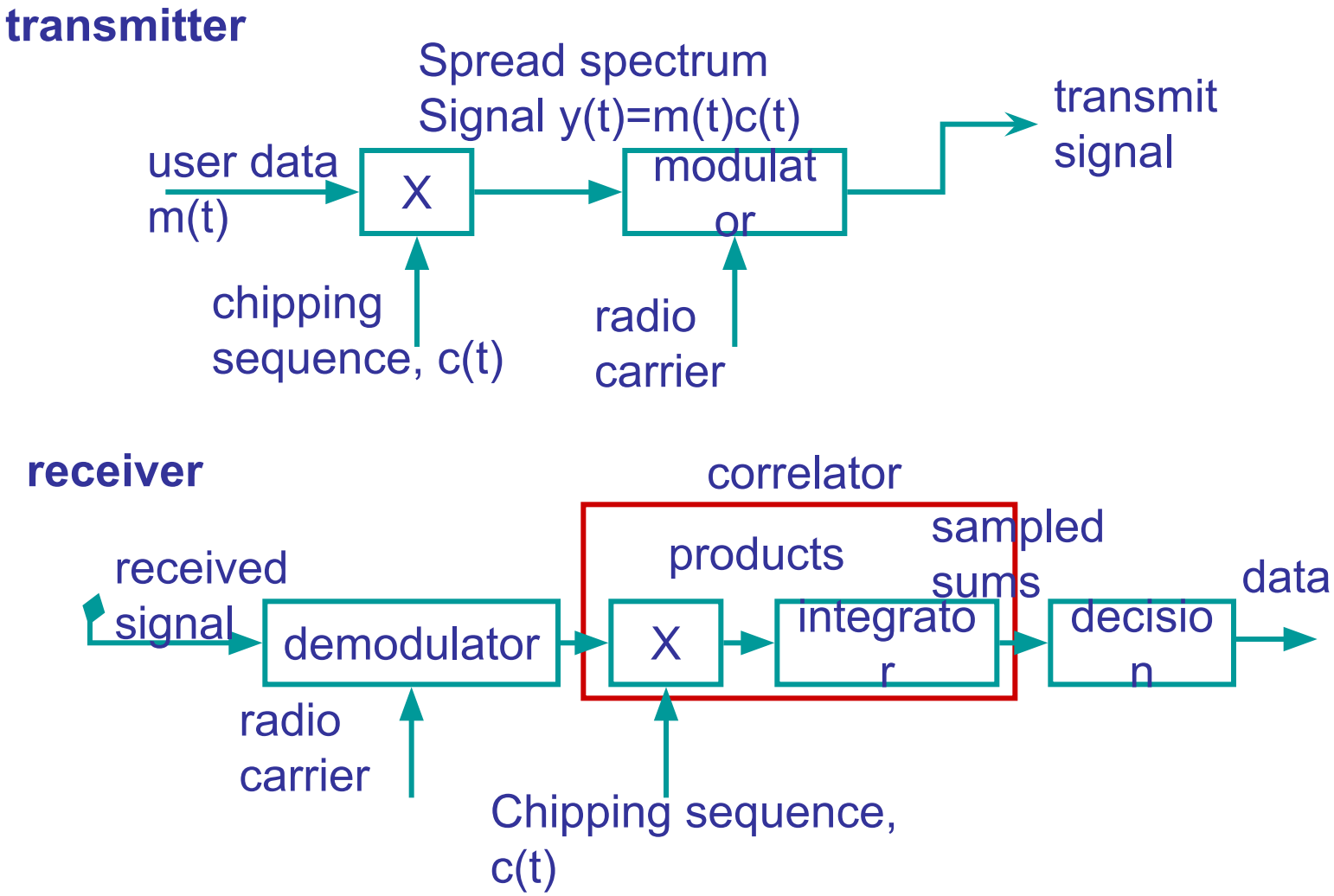

DS/SS Comments III

- Pseudonoise(PN) sequence chosen so that its autocorrelation is very narrow => PSD is very wide
  - Concentrated around $\tau \leq T_c$
  - Cross-correlation between two user's codes is very small

DS/SS Comments IV

- Secure and Jamming Resistant
  - Both receiver and transmitter must know c(t)
  - Since PSD is low, hard to tell if signal present
  - Since wide response, tough to jam everything
- Multiple access
  - If $c_i(t)$ is orthogonal to $c_j(t)$, then users do not interfere
- Near/Far problem
  - Users must be received with the same power

FH/SS (Frequency Hopping Spread Spectrum) I

- Discrete changes of carrier frequency
  - sequence of frequency changes determined via PN sequence
- Two versions
  - **Fast Hopping**: several frequencies per user bit (FFH)
  - **Slow Hopping**: several user bits per frequency (SFH)
- Advantages
  - frequency selective fading and interference limited to short period
  - uses only small portion of spectrum at any time
- Disadvantages
  - not as robust as DS/SS
  - simpler to detect

FHSS (Frequency Hopping Spread Spectrum) II

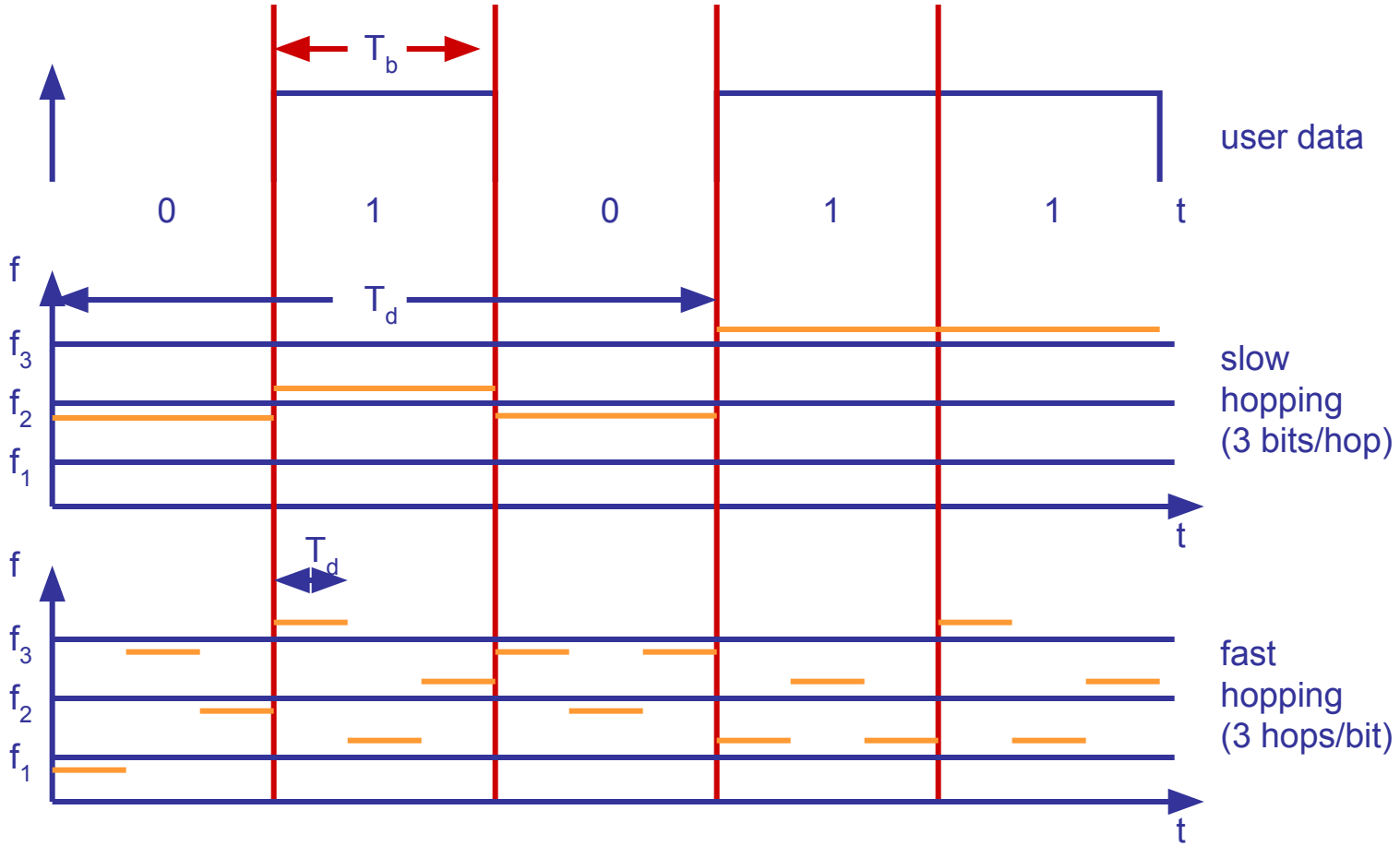

T_b: bit period T_d: dwell time

FHSS (Frequency Hopping Spread Spectrum) III

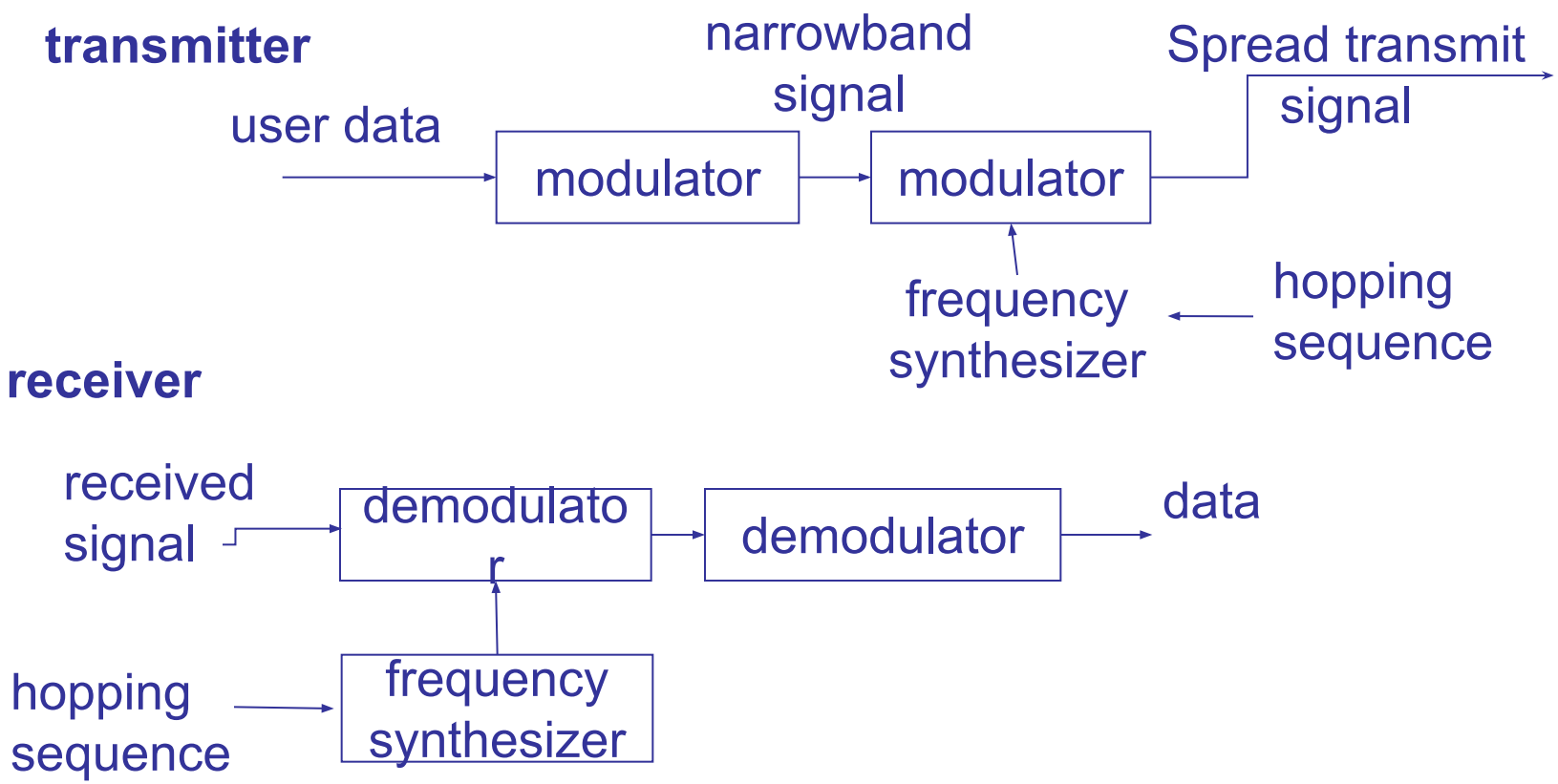

Applications of Spread Spectrum

- Cell phones
  - IS-95 (DS/SS)
  - GSM
- Global Positioning System (GPS)
- Wireless LANs
  - 802.11b

Performance of DS/SS Systems

- Pseudonoise (PN) codes
  - Spread signal at the transmitter
  - Despread signal at the receiver
- Ideal PN sequences should be
  - Orthogonal (no interference)
  - Random (security)
  - Autocorrelation similar to white noise (high at τ=0 and low for τ not equal 0)

PN Sequence Generation

- Codes are periodic and generated by a shift register and XOR
- Maximum-length (ML) shift register sequences, *m*-stage shift register, length: $n = 2^m - 1$ bits

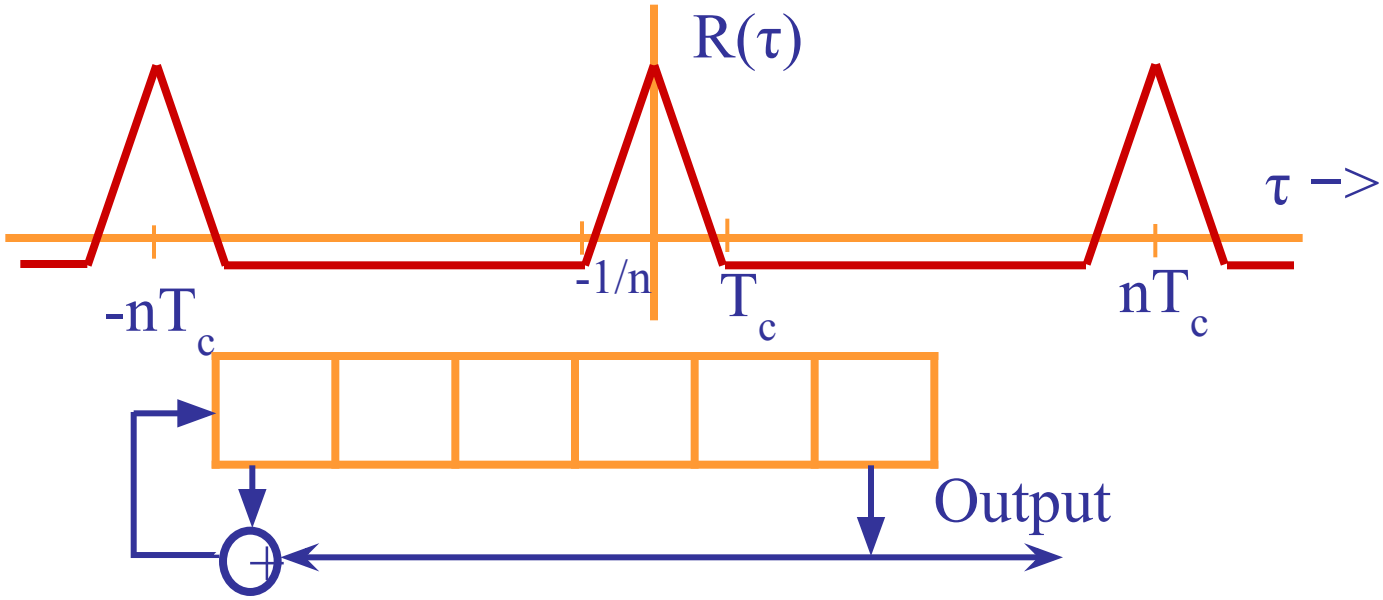

Generating PN Sequences

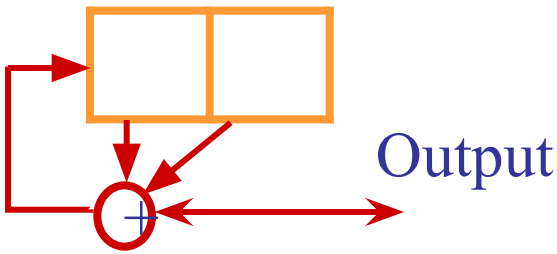

- Take m=2 =>L=3
- c_n=[1,1,0,1,1,0, . . .], usually written as bipolar c_n=[1,1,-1,1,1,-1, . . .]

$$R_c(m) = \frac{1}{L}\sum_{n=1}^{L} c_n c_{n+m}$$

$$= \begin{cases} 1 & m = 0 \\ -1/L & 1 \le m \le L-1 \end{cases}$$

m	Stages connected to modulo-2 adder
2	1,2
3	1,3
4	1,4
5	1,4
6	1,6
8	1,5,6,7

Problems with *m*-sequences

- Cross-correlations with other *m*-sequences generated by different input sequences can be quite high
- Easy to guess connection setup in $2m$ samples so not too secure
- In practice, Gold codes or Kasami sequences which combine the output of m-sequences are used.

Detecting DS/SS PSK Signals

transmitter

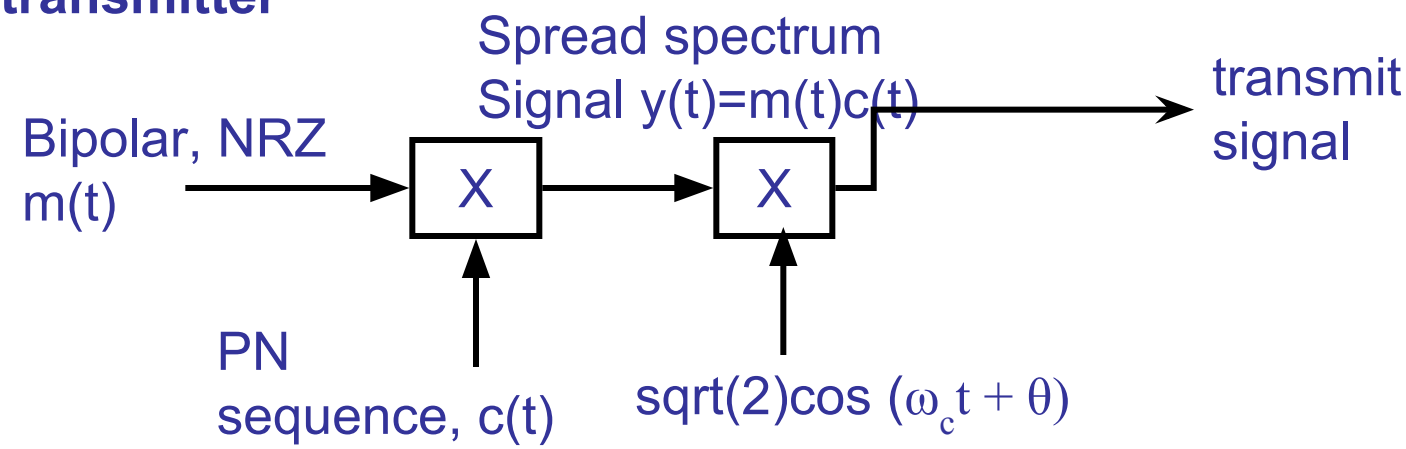

receiver

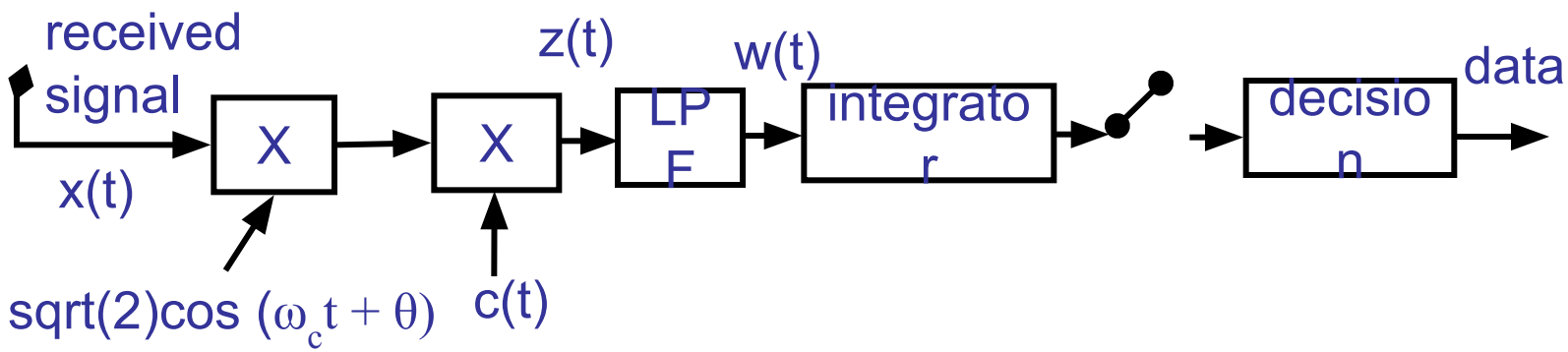

Optimum Detection of DS/SS PSK

- Recall, bipolar signaling (PSK) and white noise give the optimum error probability

$$P_b = Q\left(\sqrt{\frac{2E_b}{\aleph}}\right)$$

- Not effected by spreading
  - Wideband noise not affected by spreading
  - Narrowband noise reduced by spreading

Signal Spectra

$$\text{Processing Gain } N = \frac{B_{ss}}{B} = 10\log_{10}\left(\frac{B_{ss}}{B}\right) = \frac{T_b}{T_c}$$

- Effective noise power is channel noise power plus jamming (NB) signal power divided by *N*

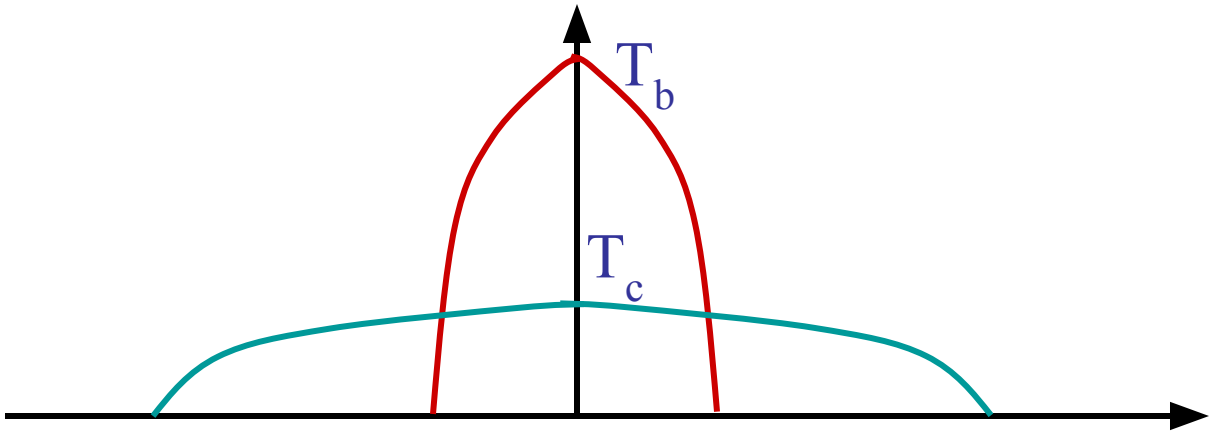

Multiple Access Performance

- Assume K users in the same frequency band,
- Interested in user 1, other users interfere

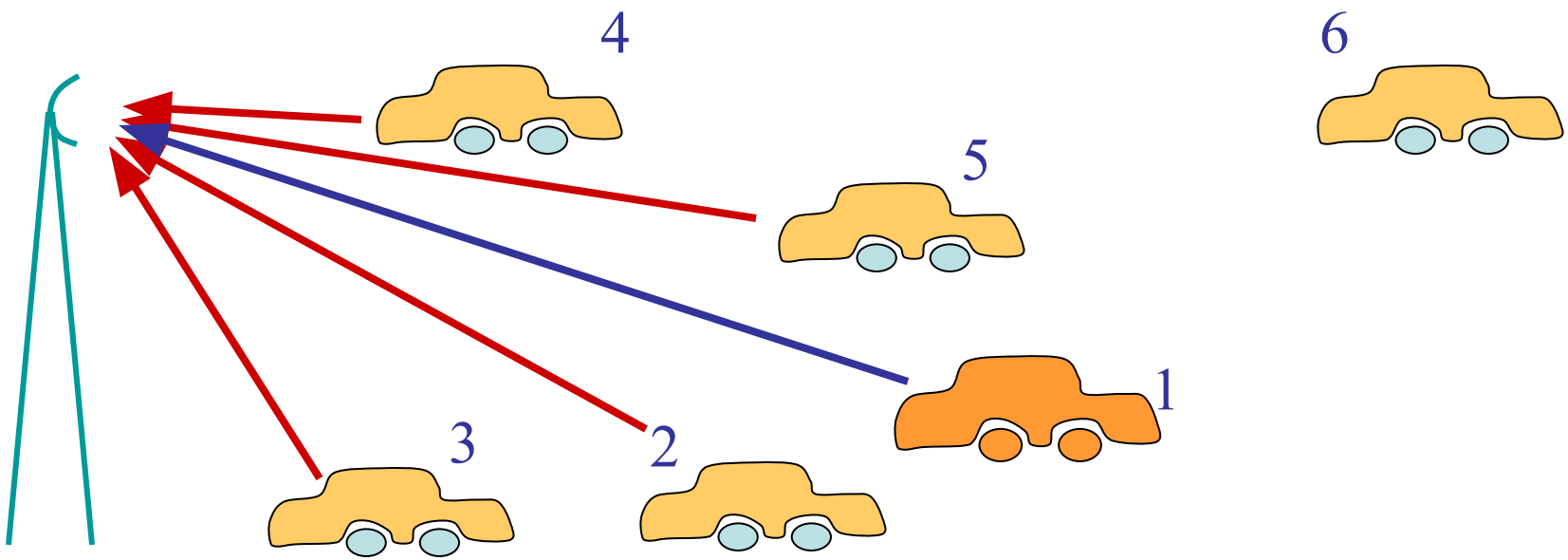

Signal Model

- Interested in signal 1, but we also get signals from other *K-1* users:

$$\begin{aligned} x_k(t) &= \sqrt{2}\, m_k(t-\tau_k)\, c_k(t-\tau_k)\cos\left(\omega_c(t-\tau_k)+\theta_k\right) \\ &= \sqrt{2}\, m_k(t-\tau_k)\, c_k(t-\tau_k)\cos\left(\omega_c t+\phi_k\right) \qquad \phi_k = \theta_k - \omega_c \tau_k \end{aligned}$$

- At receiver,

$$x(t) = x_1(t) + \sum_{k=2}^{K} x_k(t)$$

Interfering Signal

- After mixing and despreading (assume τ_1=0)

$$z_k(t) = 2\, m_k(t-\tau_k)\, c_k(t-\tau_k)\, c_1(t) \cos(\omega_c t + \phi_k) \cos(\omega_c t + \theta_1)$$

- After LPF

$$w_k(t) = m_k(t-\tau_k)\, c_k(t-\tau_k)\, c_1(t) \cos(\phi_k - \theta_1)$$

- After the integrator-sampler

$$I_k = \cos(\phi_k - \theta_1) \int_0^{T_b} m_k(t-\tau_k)\, c_k(t-\tau_k)\, c_1(t)\, dt$$

At Receiver

- m(t) =+/-1 (PSK), bit duration Tb
- Interfering signal may change amplitude at τk

$$I_k = \cos(\phi_k - \theta_1)\left[b_{-1}\int_0^{\tau_k} c_k(t-\tau_k)c_1(t)\,dt + b_0\int_{\tau_k}^{T_b} c_k(t-\tau_k)c_1(t)\,dt\right]$$

$$I_1 = \int_0^{T_b} m_1(t)\, c_1(t)c_1(t)\,dt$$

- At User 1 $\int_0^{T_b} c_1(t)c_1(t)\,dt = A \quad \int_0^{T_b} c_k(t-\tau_k)c_1(t)\,dt = 0$
- Ideally, spreading codes are Orthogonal:

Multiple Access Interference (MAI)

$$P_b = Q\left[\frac{1}{\sqrt{(K-1)/3N + N/2E_b}}\right]$$

- If the users are assumed to be equal power interferers, can be analyzed using the central limit theorem (sum of IID RV's)

Example of Performance Degradation

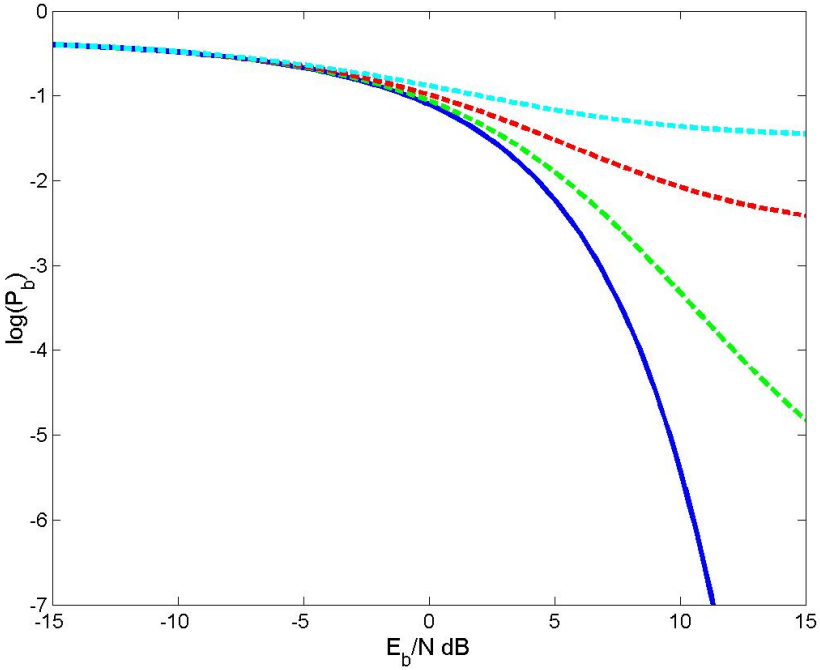

N=8

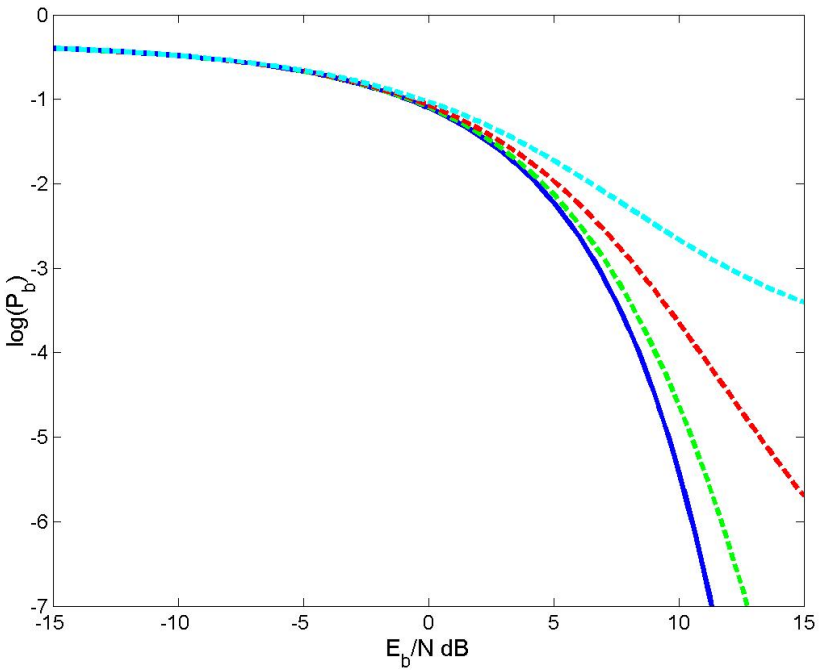

N=32

Near/Far Problem (I)

- Performance estimates derived using assumption that all users have same power level
- Reverse link (mobile to base) makes this unrealistic since mobiles are moving
- Adjust power levels constantly to keep equal

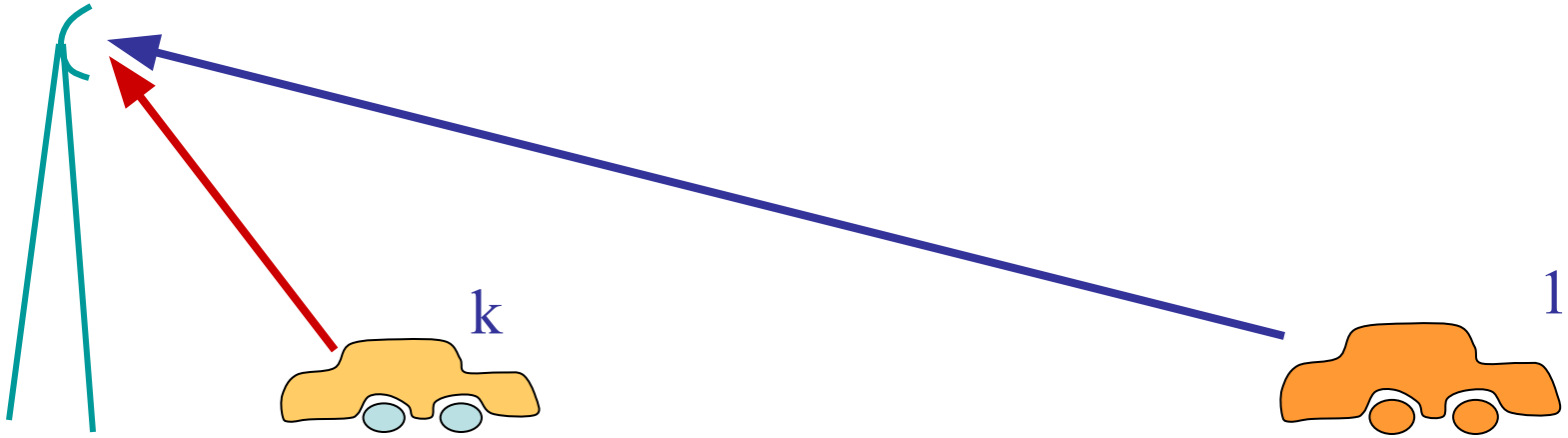

Near/Far Problem (II)

$$P_b^{(1)} = Q\left[\frac{1}{\sqrt{\sum_{k=2}^{K} E_b^{(k)} \big/ 3E_b^{(1)} N + \aleph \big/ 2E_b^{(1)}}}\right]$$

- *K* interferers, one strong interfering signal dominates performance
- Can result in capacity losses of 10-30%

Multipath Propagation

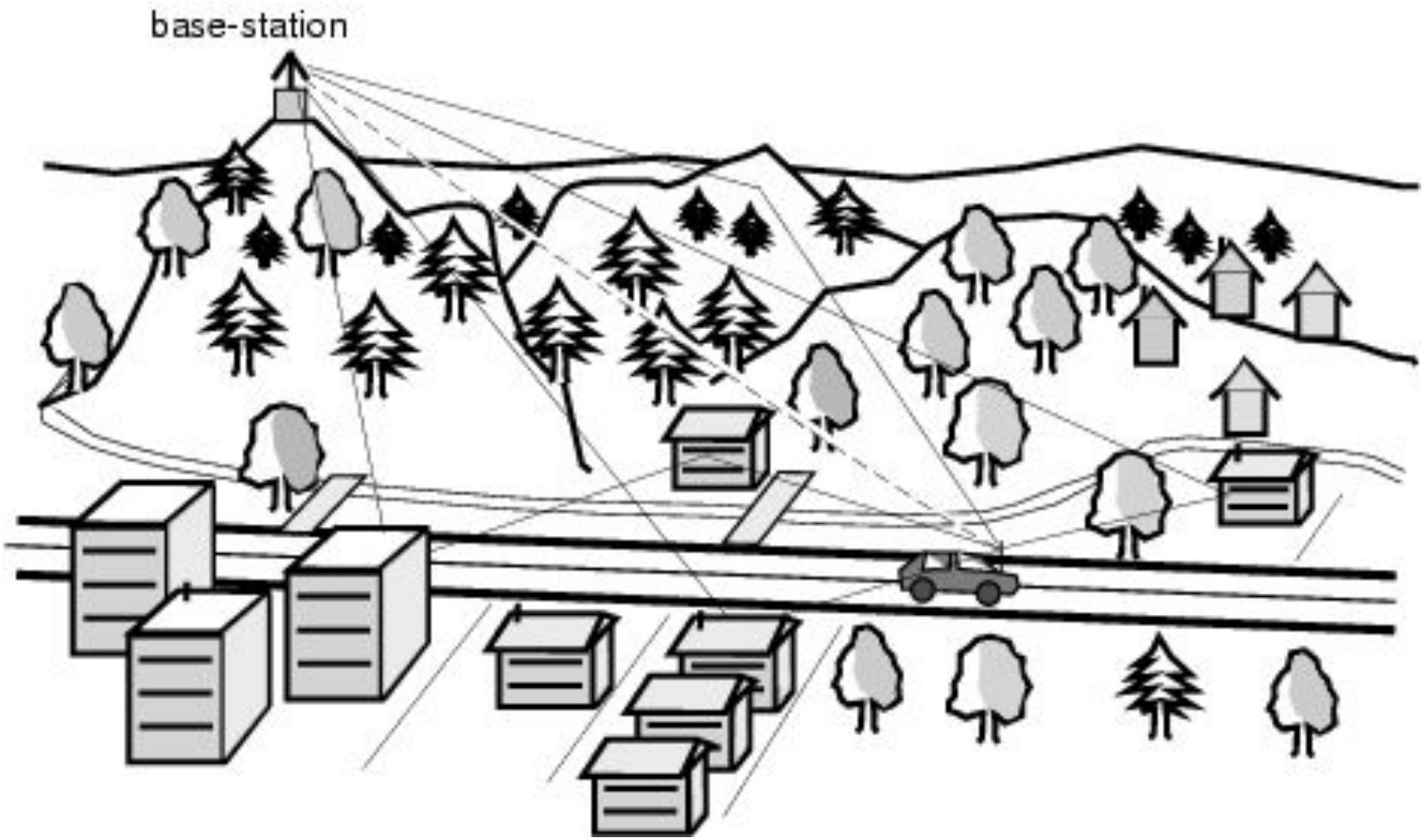

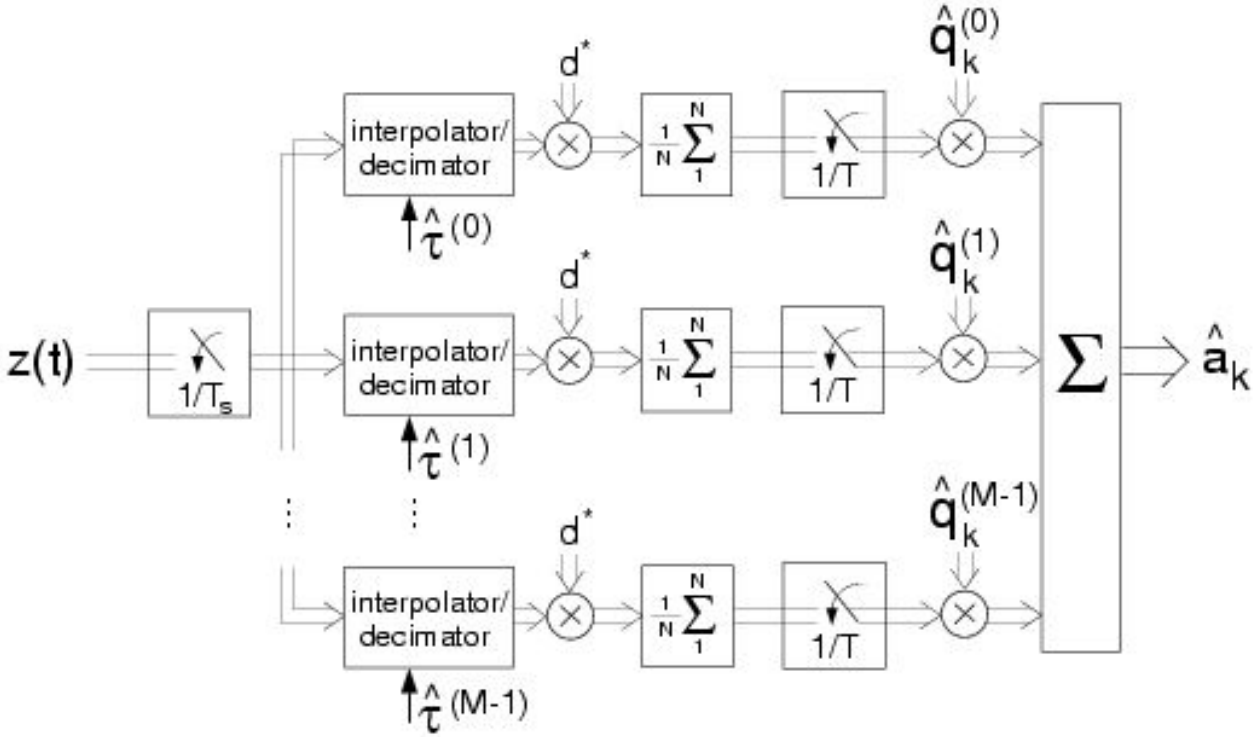

- Received signal sampled at the rate 1/Ts≥ 2/Tc for detection and synchronization
- Fed to all *M* RAKE fingers. Interpolation/decimation unit provides a data stream on chiprate 1/Tc
- Correlation with the complex conjugate of the spreading sequence and weighted (maximum-ratio criterion)summation over one symbol

RAKE Receiver

- RAKE Receiver has to estimate:
  - Multipath delays
  - Phase of multipath components
  - Amplitude of multipath components
  - Number of multipath components
- Main challenge is receiver synchronization in fading channels